OFFSET ANGULAR LIVE TOOL HOLDER

VDI 40 / DIN 5482

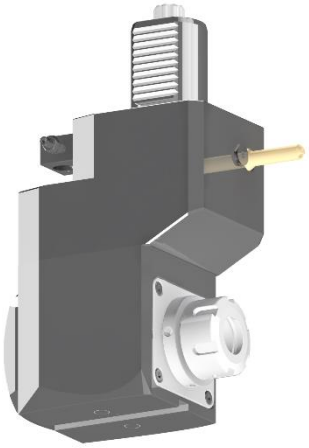

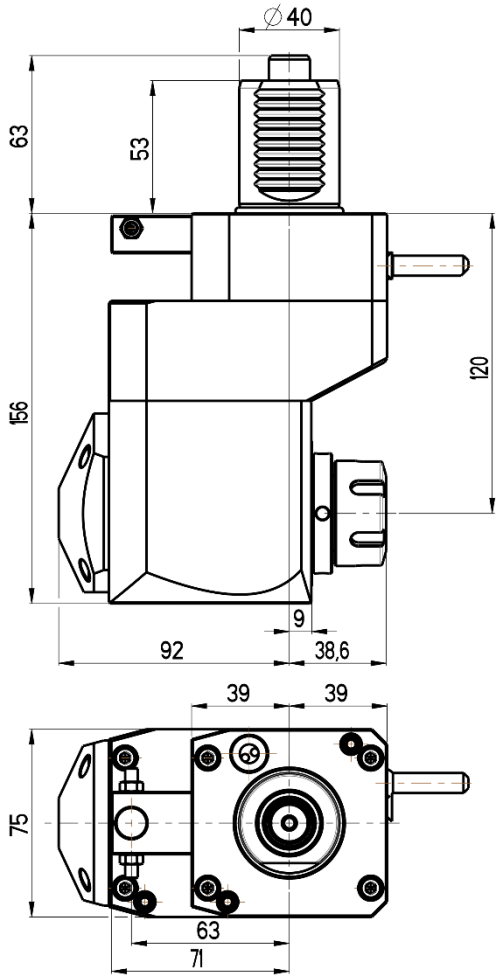

RGX1-40/411-25/1.1-120

Max. speed: *6000 rpm*

Max. torque: 50 *Nm*

Collet: *ER25*

Direction of rotation:

Ratio: *1:1*

Cooling: *external (internal cooling available)*

Accessories

Nut : Clamping wrench *type E 25*

Spindle: *Hook wrench DIN 1810B 45-50*