OFFSET STRAIGHT LIVE TOOL HOLDER

MAZAK QTN100/150

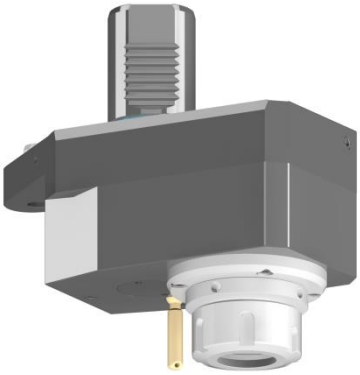

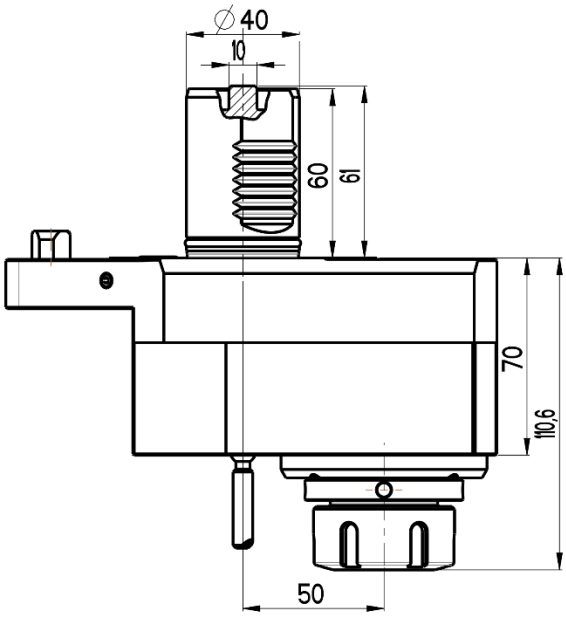

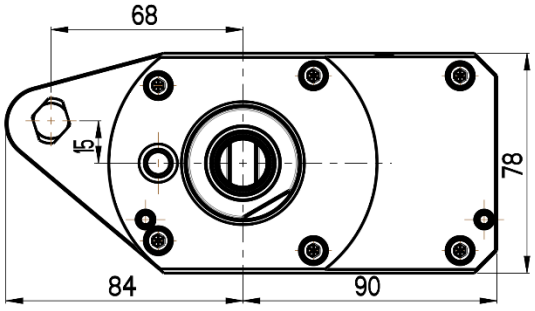

RGX1-40/321-32/2.1-50MZ1

Max. speed: *6000 rpm*

Max. torque: *50 Nm*

Collet: *ER32*

Direction of rotation:

Ratio: *1:1*

Cooling: *external & internal*

Max. pressure: *20 bar*

Accessories

Nut : Clamping wrench *type E 32*

Spindle: *Hook wrench DIN 1810B 52-55*